LED 13W PAR30 75w Replacement, UL / Energy Star 40° Beam

13w = 75-90W
LED Incandescent

Stock No.	Product Description
LED-1736-30K	**PAR30-40-13-1-3000K 13w 830 lumens Dimming**
LED-1736-50K	**PAR30-40-13-1-5000K 13w 1006 lumens Dimming**
LED-1736-50K-277	**PAR30-40-13-1-5000K 13w 1006 lumens Non-Dimming**

Description:
PAR30 LED lamp, fully encapsulated, 13 Watt, E26 medium base. Replaces 75w PAR30 halogen/ incandescent or equivalent CFL. Single COB LED design provides a wide 40° beam provides attractive spot illumination. Dimmable with CFL/LED compatible dimmer

- 13w power consumption
- 40° Beam angle
- 120VAC Dimmable
- 277VAC Non-Dimmable
- Available in 3000K or 5000K CCT
- >80 CRI
- 50,000 Rated L70 LED life
- White finish
- UL Listed (US & C)
- Energy Star rated (3000K)
- 5 Year warranty

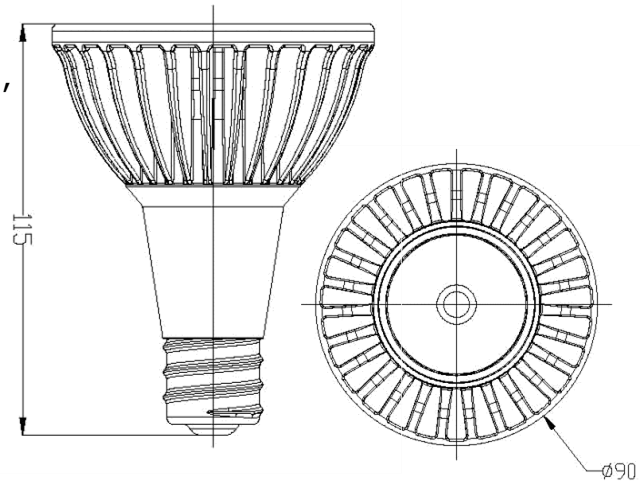

Applications:
The 13w LED lamp has been designed to retrofit existing incandescent and/or CFL installations in recessed fixtures, thereby reducing maintenance and energy expenditures - and as an energy saving light source for new fixtures and installations.

- Task lighting
- Hospitality lighting
- Recessed down-lighting
- Residential lighting

Packaging:
Master-pack: 25 each

Technical Specifications			
Bulb Type	**PAR30**	**Mounting**	**E26 Edison Base**
Bulb Material	**Aluminum/Plastic**	**LEDs:**	**1 COB LED**
Power Consumption	**13 watts**	**Beam Angle**	**40 °**
Initial Lumens	**830 / 1006 Lumens**	**Dimmable**	**Yes (120V only)**
Efficacy	**Up to 79 LPW**	**Replaces**	**75w-90w Halogen**
Rated LED Life	**Up to 50,000 Hrs.**	**CCT**	**3000K 5000K**
Power Factor:	**>90**	**CRI:**	**> 80**
IR / UV	**None**	**Mercury/ Lead Content**	**None**
Warranty	**5 year Limited**	**Dimensions**	**4.5" X 3.5"**

Note: All specification information falls within a ± 2% range and is subject to change without notice.

NOTE: Light Efficient Design is providing this information to the general public. Please note that all products contained herein are trademarked, copyrighted, and/or have patents pending. Any use of these designs is strictly prohibited without prior written consent. Light Efficient Design protects its proprietary information vigorously in the courts of the United States of America.

Light Efficient Design
a division of TADD, LLC

188 S. Northwest Highway • Cary, IL 60013
(847) 380-3540 • FAX: (847) 380-3542
www.led-llc.com